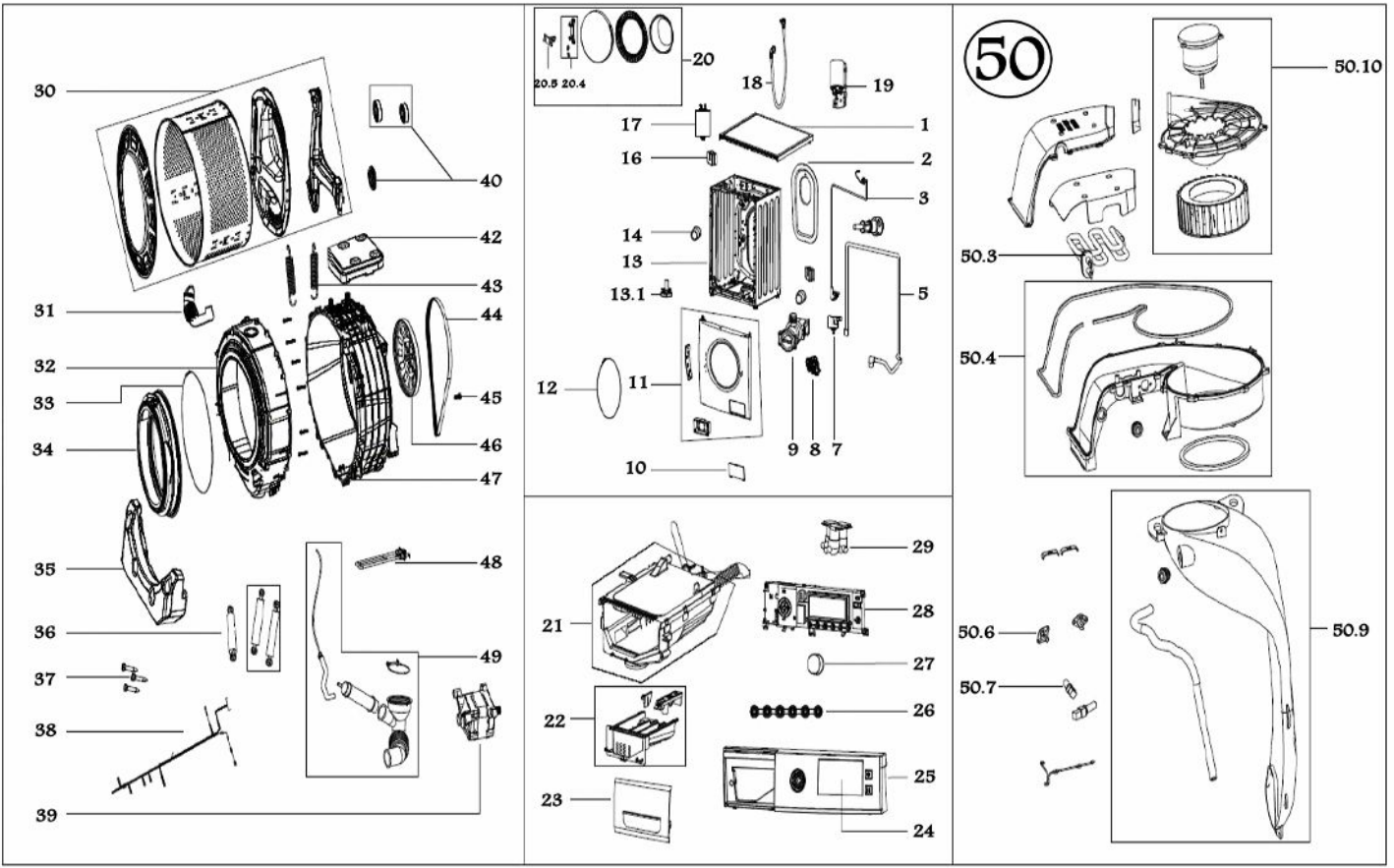
30
40
42
43
31
44
32
33
45
34
46
47
35
48
36
49
37
38
39
20
20.5 20.4
18
19
17
1
16
2
3
14
13
13.1
5
12
11
9 8 7
10
29
21
28
27
22
26
25
23
24
50
50.10
50.3
50.4
50.6
50.7
50.9